# PGC-300-60

Electric Collaborative Parallel Gripper

## Selection Method

| Serie | Gripping Force | Stroke | Brake | Cable Direction | Communication Protocol | Cable Selection | Fingertip Selection | Flange Selection | Robot Cable |
|---|---|---|---|---|---|---|---|---|---|
| PGC | 300 | 60 | W | S | M1 | L5 | J1 | F1 | 00 |

- **W** With Brake
- **S** Side
- ★①★⑤: **M1** Modbus (RS485)+I/O (NN); **M2** Modbus (RS485)+I/O (PP); **M3** Modbus (RS485)+I/O (NP); **M4** Modbus (RS485)+I/O (PN)
- **LX** Without Extend Cable; **L1** 1m Cable; **L3** 3m Cable; **L5** 5m Cable; **L10** 10m Cable
- **J1** Standard Fingertip
- **F1** Standard Flange
- Table Below

★①:
I/O(NN): NPN/NPN
I/O(PP): PNP/PNP
I/O(NP): NPN/PNP
I/O(PN): PNP/NPN

| | | | | | | | | | | |
|---|---|---|---|---|---|---|---|---|---|---|
| **00** Without Robot Cable | **01** Elite CS, UR CB, SIASUN, Hanwha A, UR E, DOBOT CR, DOBOT Nova | **02** AUBO | **04** JAKA | **06** ROKAE SR, ROKAE ER | **09** Doosan A | **11** Elite EC | **13** Neuromeka | **15** Hanwha HCR | | |
| | | **03** ELEPHANT | **05** TECHMAN | **07** DOBOT MG400 | **10** Doosan M | **12** Han's | **14** FAIRINO | **16** UF x Arm | **17** ROKAE CR | |

*⑤ It is recommended that no more than 4units of DH-Robotics products be accessed on a single 485 bus, otherwise 485 communication anomalies may occur.
If you need to access more than 4 devices, it is recommended to contact the sales staff for product adjustment.
**The Modbus RTU (RS485) to USB module will no longer be provided for free. Please place a separate order if needed.**

# TECHNICAL SPECIFICATIONS

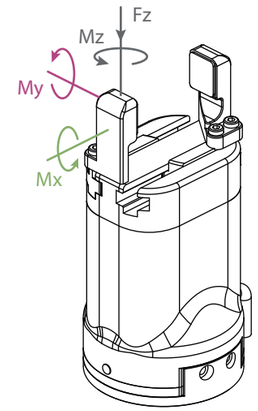


| Static Vertical Allowable Load | |
|---|---|
| Fz | 600 N |

| Allowable Loading Moment | |
|---|---|
| Mx | 15 N·m |
| My | 15 N·m |
| Mz | 15 N·m |

*② The recommended load calculation is based on pure friction force gripping, with a friction coefficient of 0.2 and a safety factor of 4. The center of gravity shift of the gripped object will also affect the load. If you have any questions, please consult us.
*③ Requires external communication convertor or customization, pleass contact sales or technical support.
*④ When selecting the power supply, please select according to the peak current. If the current is lower than the parameter, it will cause the product can not work normally.

| Product Parameter | |
|---|---|
| Gripping force (per jaw) | 80~300 N |
| Recommended workpiece weight*② | 6 kg |
| Stroke | 60 mm |
| Full stroke opening/closing time | 0.8 s/0.8 s |
| Repeat accuracy (position) | ± 0.03 mm |
| Weight | 1.5 kg |
| Size | 178 mm x 90 mm x 90 mm |
| Noise emission | < 50 dB |
| Driving method | Precise planetary gears + Rack and pinion |

| Working Environment | |
|---|---|
| Communication interface | Standard: Modbus RTU (RS485)、Digital I/O(2 inputs 2 outputs)<br>Optional: TCP/IP、USB2.0、CAN2.0A、PROFINET、EtherCAT *③ |
| Rated voltage | 24 V DC ± 10% |
| Current | 0.4 A(Rated)/ 2 A(Peak)*④ |
| Rated power | 9.6 W |
| IP class | IP 67 |
| Recommended environment | 0~40°C, under 85% RH |
| Certification | CE, FCC, RoHS |

Build-in Controller · Gripping Force Adjustable · Position Adjustable · Speed Adjustable · Drop Detection · Plug & Play · Self-locking Mechanism

## Technical Drawings

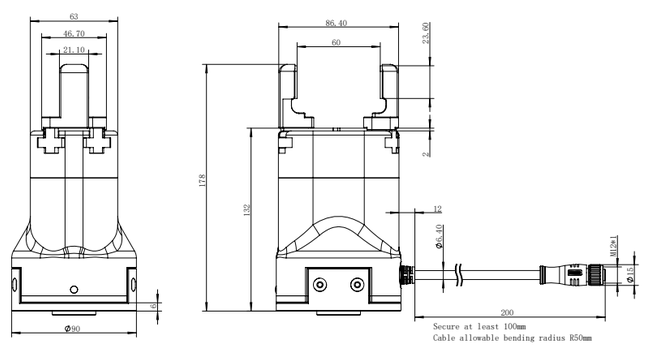


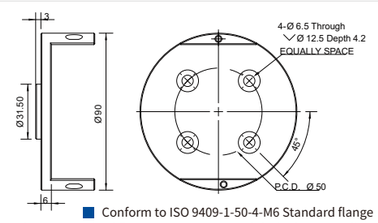


■ Conform to ISO 9409-1-50-4-M6 Standard flange
*For customized flanges, we recommend designing according to the robot mounting holes, or contact us.

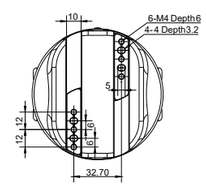


■ Finger mounting holes